Conductor Bar
Safe-Lec 2®

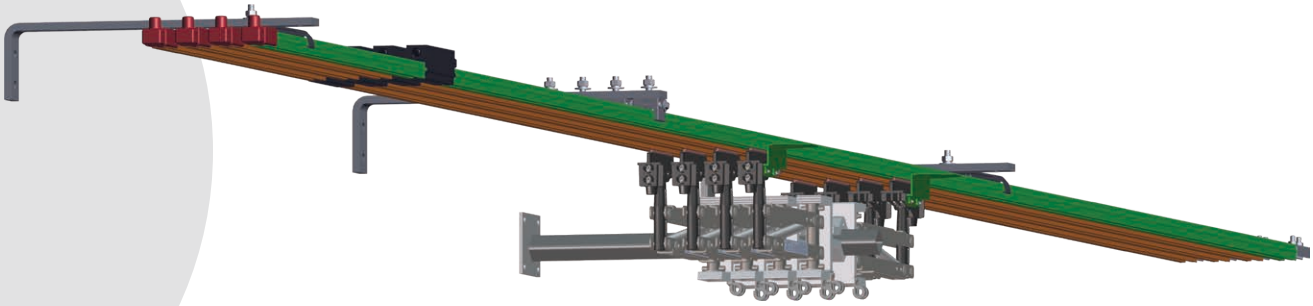

CONDUCTIX wampfler

Contents

Overview & Design Features 3

Conductor Bar Summary Chart 4

Quotations Data Sheet 5-6

Overview & Features 7-11

Safe-Lec 2 vs. 8-Bar 7
Typical 4 Bar System 8
Bar and Collector UL Electrical Ratings 9-10
Specifications 11

Safe-Lec 2 System Components 12-31

Galvanized Steel Bar (100,125A) 12
Copper Bar (160, 250, 400A) 13
Aluminum/Stainless Steel Bar (200, 315 400A) 14
Splice Joints & Joint Compound 15
Joint Covers & Power Feeds 16-17
End Caps 17
Hanger Clamps 18-19
Anchor Clamps 19
Pickup Guides 20
Power Interrupting Sections 21
Collectors 22-25
Collector Shoe & Holder 26
Flange Brackets 27-28
Girder Clamps 28
Web Brackets 29
Mounting and Collector Brackets 30
Splice Hardware Kits 31
Installed Dimensions 32
Heater Wire 33

Notes 34

Other Products from Conductix-Wampfler 35

Contact Information 36

Overview & Design Features

Safe-Lec 2™ - The "next generation" in electrification for overhead cranes and other moving equipment. This modern system delivers safe, reliable power in a rugged, easy-to-install package.

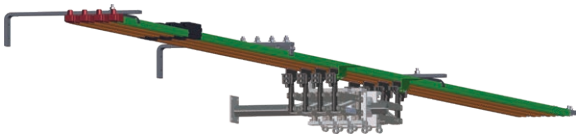

Safe-Lec 2 is ideal for:

- Small to medium cranes
- Conveyor systems
- Moderately curved systems
- Monorails
- Material Handling Equipment
- Amusement rides

Ampacity range

100A, 125A, 160A, 200A, 250A, 315A, & 400A capacities up to 600 volts maximum.

Maximum Speed

1200 ft/min

Options

Heater wire systems (Pg. 26), stainless steel hardware, green bonding (ground) conductor covers, black "UV resistant" outdoor covers, curved systems to a minimum of 60" radius (curved at our factory).

Safe-Lec 2 Features

- Positive shoe tracking and superior conductivity. Long-wearing shoe is guided by the V-contact in the rail.
- Robust collector arm articulates to help maintain contact.
- IP2 "finger safe" operation; no live parts exposed.
- Secure, bolted splice joints pre-installed on conductors for superior electrical connection. Won't pull apart over time. Includes one-piece snap-on cover.
- Peaked insulating covers to shed dust and water. The same cover profile fits all bar styles; fewer parts to stock.

Safe-Lec 2 Features

- Less expense and shorter crane downtime.
- Requires fewer splice joints; 14' 9" (4.5m) rail lengths versus 10' for most other systems.
- Includes pre-installed splice joints on one end of bar.
- Uses multi-pole hanger; multiple bars snap into the same hanger and hanger mounts with a single bolt.
- Requires fewer expansion joints; up to 492' (150m) without an expansion section.
- Is easy to install and align with slotted hanger brackets.

MATERIAL HANDLING INDUSTRY OF AMERICA® Member Company

Component Manufacturer CMAA™ OEM Crane Component Manufacturer

Conductor Bar Summary Chart

Conductor Bar Lines Manufactured in the USA

For conductor rails manufactured in Germany but available in the USA, please refer to KAT0800-0001 | Conductor Rail Overview

	Safe-Lec 2 **CAT1003**	**Hevi-Bar II** **CAT1006**	**8 Bar** **CAT1004**	**Side Contact** **CAT1004**
Common Applications	Small to medium overhead cranes, moderate curves	Medium to large overhead cranes, higher speeds	Small to medium overhead cranes, tighter curves	Constrained spaces, slip ring applications, curves
Bar Ampacity Selections	100 125 160 200 250 315 400	500 700 1000 1500	40 90 110 250 350	40 90 110 250 350
Maximum Voltage	600	600[1]	600	600
Maximum Speed[2] *ft./min (m/min)*	1200 (365.7)	2000 (609.6)	900 (274.3)	600 (182.8)
Bar Spacing - *in. (mm)*	1.69 (43)	3.0 (76.2)	3.0 (76.2)	1.375 (34.9)
Cover Temperatures **Low:** *160° F (71° C)* **Medium:** *250° F (121° C)* **Extreme:** *-60° to 280° F (-51.1 to 137.7° C)*	Low Medium	Low Medium Extreme *(700 & 1000 Amp only)*	Low Medium Extreme	Low Medium
Outdoor Rated	Yes	Yes	Yes	No
Dura-Coat Available?	No	Yes	No	No
Orientation *(collector only)*	Bottom / Side	Bottom / Side	Bottom / Side	Side
Minimum Bend Radius with *Low Temp Cover - in. (mm)*	60.0 (1542)	Consult Factory	18.0 (457)	9.0 (228)
Minimum Bend Radius with *Medium Temp Cover - In. (mm)*	6.0 (1542)	Consult Factory	57.0 (1447)	57.0 (1447)
Heater Wire Available	Yes	500 Amp Only	No	No

[1] Can be configured for 5000 volts or more - contact Factory. [2]For faster speeds - contact Factory

Conductix-Wampfler Germany - Conductor Bar Lines

Conductix-Wampfler Germany's high performance conductor rails are stocked and available in the USA. Please contact our sales office at 1 800 521 4888 for more information. See Pg 86 of this catalog for a brief overview of available series.

Don't see what you need? Give us a call. We offer hundreds of special designs and options!

Conductor Bar Specification Data Sheet

E-mail to: sales.us@conductix.com

Request Date

Company

Company Type

Sales Person

Contact

Title

Tel

Fax

E-mail

Application

Application Type: ☐ Runway ☐ Bridge ☐ Monorail ☐ Other

☐ New Approved Installation? ☐ Extended Existing? ☐ Replacement?

System Length: _____ ☐ Feet ☐ Meters

Total Number of Conductors: _____ Will one conductor be designated as a ground: ☐ Yes ☐ No

Does your application require Data Transmission as well as Power Transmission ☐ Yes ☐ No

If yes, describe your requirements: _____

_____

_____

Environmental Data

☐ Indoors ☐ Outdoors ☐ Both Indoors & Outdoors ☐ Outdoor & Ice

Ambient Temperature Range - Min. _____ Max. _____ ☐ °F ☐ °C

Radient Heat Temperature Range - Min. _____ Max. _____ ☐ °F ☐ °C

Will a heater wire need to be included: ☐ Yes ☐ No (if yes, consult factory)

Will there be corrosive materials present ☐ Yes ☐ No If yes, what type (salt, chlorine, steam, acids, etc.) _____

Are there any other environmental considerations for this application? _____

_____

_____

Mechanical Data

Vehicle Speed: _____ ☐ feet/min ☐ meters/min

Duty Cycle: _____ cycles per: _____ (hour, day, minute, etc.)

Number of vehicles or trolleys: _____ Crane Class (if applicable) _____

Will Conductix be supplying mounting brackets: ☐ Yes ☐ No

Does the system have any curves: ☐ Yes ☐ No if yes, Radius _____ ☐ Feet ☐ Meters Angle _ _____°

Mounting position with regards to monorail: ☐ Inside ☐ Outside ☐ Both

Other mechanical Notes: _____

_____

_____

Conductor Bar Specification Data Sheet

Electrical Specifications

Number of power feeds: _____

Location of power feeds (check all that apply): ☐ Center ☐ End ☐ Multiple

☐ Advanced: Distance power feeds will be from end of system: _____ (or attach diagram)

Number of power phases: _____ Operating Voltage: _____ (volts) ☐ AC ☐ DC

Total current draw: (sum of all vehicles) _____ (Amps) Demand factor _____(typically .9)

Operating Frequency: _____(Hz - USA is 60 Hz)

Sizing systems for multiple hoists, motors, and/or multiple cranes

For a single crane: Size the conductor bar to handle 100% of the current draw of the largest motor or group of motors, plus 50% of the combined current draw of the other motors on the vehicle.

For multiple cranes or vehicles: Determine the current draw for each crane/vehicle, using the method above. Sum all the current draws for each crane/vehicle, then multiply the sum by the appropriate demand factor:

# of Cranes/vehicles	Demand Factor
2	.95
3	.91
4	.87
5	.84
6	.81
7	.78

Safe-Lec 2 vs. 8-Bar

Here are several specific reasons why Safe-Lec 2 is superior to a traditional (and now outmoded) 8-Bar system. And we should know, we invented 8-Bar over 50 years ago!

Safe-Lec 2

8-Bar

Quicker and less costly Installation

- 14.76 ft (4.50m) bar lengths; fewer joints
- Multiple pole hangers; a "snap" to install

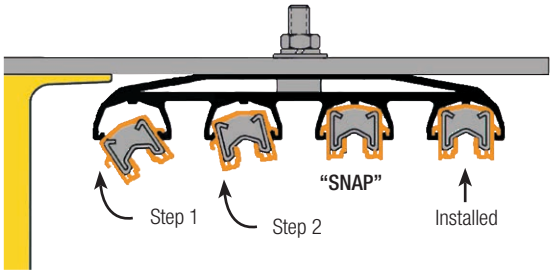

- 10 ft (3.05m) bar lengths; more splices required
- Hangers hold only one bar each

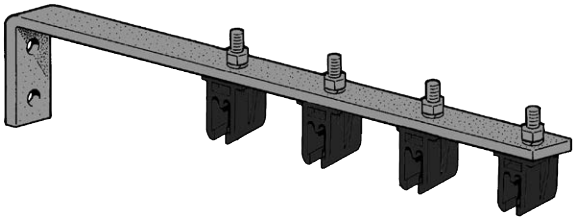

- Wires must be spliced to collector pigtails

More secure splice joint

- Bolted joints
- No special tools required
- No need for "joint keepers" or "joint repair kits", etc

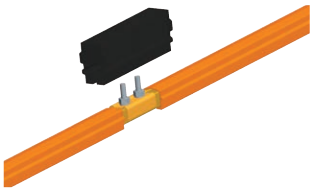

- Pinned joint can pull apart; requires special parts

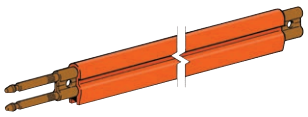

- Special tool required

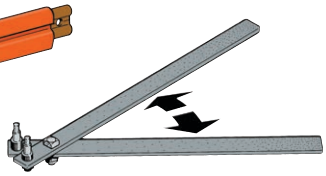

Fewer expansion sections required

- Safe-Lec 2 can go 492 ft (150m) before an expansion is required

- 8-Bar can only go 300 ft before an expansion section is required (or 200 ft for copper bar)

Easier system alignment

- Slotted brackets are available to reduce hole alignment problems
- System alignments are easy!

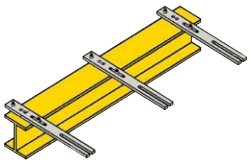

- Brackets have round holes, so alignment must be perfect
- Harder to make system alignment adjustment

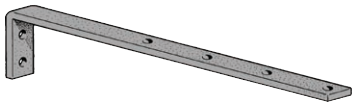

Superior Collector Shoe tracking

Shoe is guided by the V-contact in the metal bar

- Collector arm articulates to accommodate mild system misalignments

- Brackets have round holes, so alignment must be perfect
- Shoe is guided by plastic cover. Accurate system alignment is much more critical.

Typical 4-Bar System

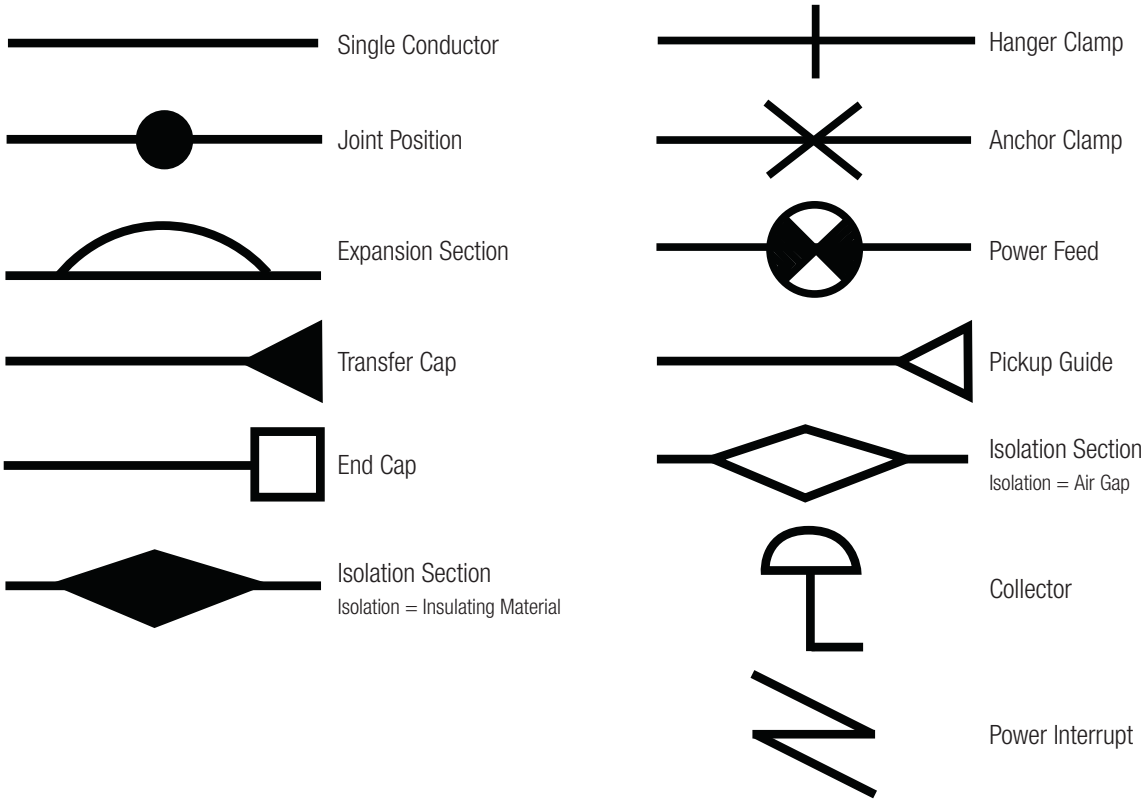

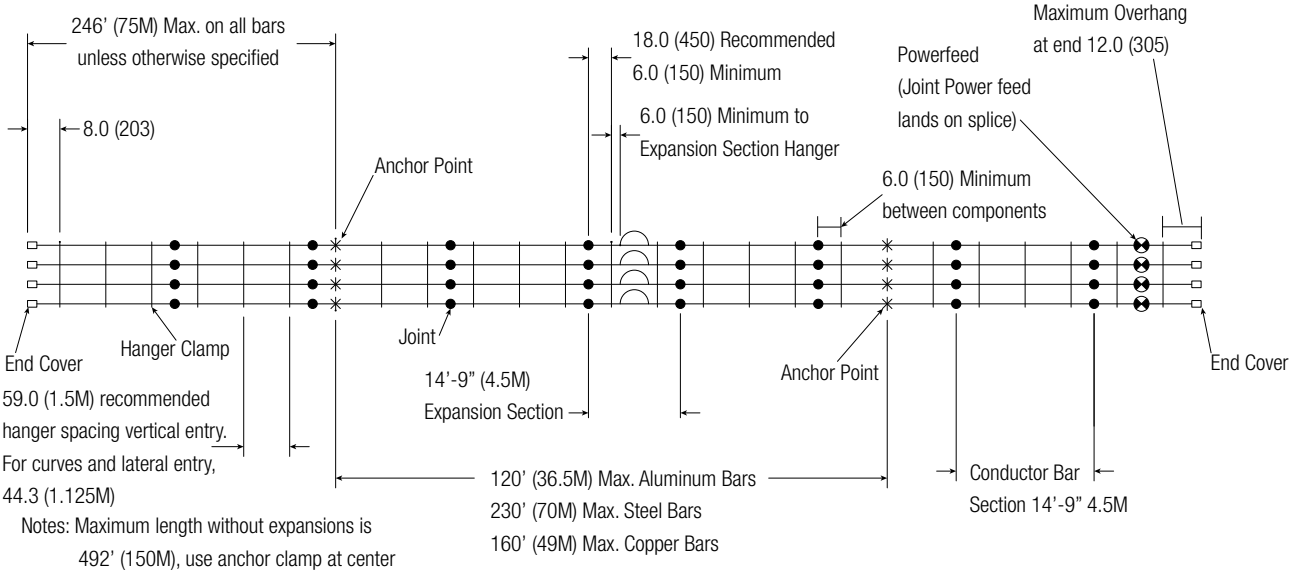

Notes: Maximum length without expansions is
492' (150M), use anchor clamp at center

Dimensions are in Inches (mm)

ATTENTION: CURVED BAR TO BE FACTORY BENT ONLY!

Electrical Ratings

Voltage Drop Calculations

Volt drop calculation ^{3}U:

3-Phase AC $\Delta U = \sqrt{3} \times I \times D \times Z$

Single Phase AC $\Delta U = 2 \times I \times D \times Z$

Continuous current DC $\Delta U = 2 \times I \times D \times R$

$$\Delta U\% = (^{3}U \times 100) / U_{n}$$

Where:

ΔU: voltage drop in Volts

U_n: Nominal voltage

I: Maximum current in amps

D: Distance between the feed and pick-up points in meters.

R: Resistance of conductor in ohms per meter (see Pg. 11)

Z: Impedance of conductor in ohms per meter (see Pg. 11)

See Appendix I and Appendix II for more information about voltage drop.

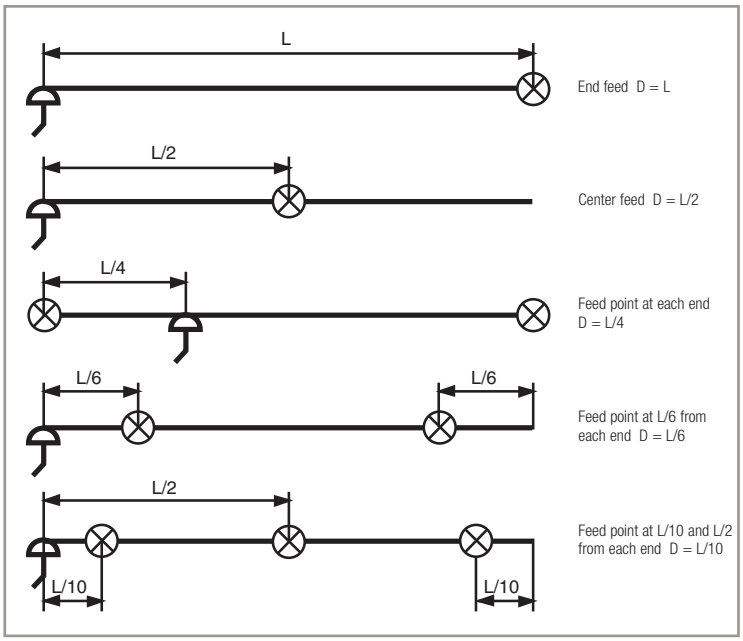

Current Rating

The maximum allowable continuous current rating of the conductor bar depends on the Duty Factor "K" of the cranes and the maximum ambient temperature Ta.
Allowable current (I) is calculated using the following formula:

$$I_{allowable} = \text{Nominal Current} \times K$$

Factor "K"						
	Duty / Ta	100%	80%	60%	40%	20%
Standard Cover	77°F (25°C)	1.000	1.118	1.291	1.581	2.236
	95°F (35°C)	0.905	1.011	1.168	1.430	2.023
	113°F (45°C)	0.798	0.892	1.030	1.261	1.784
	130°F (55°C)	0.674	0.754	0.870	1.066	1.508
Medium Heat Cover	150°F (65°C)	0.775	0.866	1.000	1.225	1.732
	167°F (75°C)	0.707	0.791	0.913	1.118	1.581
	185°F (85°C)	0.632	0.707	0.816	1.000	1.414

For UL rated capacities, see table on Pg. 10

Bar and Collector UL Electrical Ratings

UL testing performed at fully stationary

UL File: E16232

For a full list of UL listed components vist UL Product IQ at: productiq.ulprospector.com or contact the factory.

Questions? Contact us at: 800-521-4888 or sales.us@conductix.com

Standard Phase	Standard Ground	Description	UL Rating (Continuous)	UL Rating (50% DC)	UL Rating (33% DC)
310101-J	310102-J	100A Galvanized Steel Conductor Bar	85A	100A	N/A
310201C-J	310202-J	125A Galvanized Steel Conductor Bar	100A	125A	N/A
310301-J	310302-J	160A Copper Conductor Bar	160A	200A	N/A
310401-J	310402-J	250A Copper Conductor Bar	250A	315A	N/A
310501-J	310502-J	400A Copper Conductor Bar	300A	400A	N/A
310601-J	310602-J	200A Aluminum-Stainless Conductor Bar	200A	250A	N/A
310701-J	310702-J	315A Aluminum-Stainless Conductor Bar	250A	315A	N/A
399101-J	399102-J	400A Aluminum-Stainless Conductor Bar	250A	350A	400A
SL2C-100SP-1M	SL2C-100G-1M	100A SL2C Collector (w / Copper or Galvanized bar)	75A	100A	130A
SL2C-100SP-1M	SL2C-100G-1M	100A SL2C Collector (w / Aluminum-Stainless Bar)	36A	50A	60A
SL2C-200SP-1M	SL2C-200G-1M	200A SL2C Collector (w / Copper or Galvanized bar)	115A	160A	200A
SL2C-200SP-1M	SL2C-200G-1M	200A SL2C Collector (w / Aluminum-Stainless bar)	75A	100A	130A

Specifications

The appropriate conductor bar can be chosen only when all the relevant factors are known. Please refer to the Data Sheet on Pg. 5, and to Appendices I through IV at the back of this catalog. Also, please consult Conductix-Wampfler sales if you have any questions about the suitability of this product to your application.

Safe-Lec 2 Conductor Bar

	Galvanized Steel		Copper			Aluminum / Stainless Steel		
Nominal Current	100A	125A	160A	250A	400A	200A	315A	400A
Cross Sectional Area	63mm^2	93mm^2	50mm^2	63mm^2	93mm^2	104mm^2	120mm^2	156mm^2
Maximum System Voltage AC or DC (Per UL listing) ✱	600V	600V	600V	600V	600V	600V	600V	600V
Resistance R (for DC) at 20^0 C (Ω/m)	0.002867	0.001933	0.000342	0.000274	0.000184	0.000301	0.000261	0.000199
Impedance Z (for AC) at 20^0 C (Ω/m)	0.002891	0.001968	0.000364	0.000300	0.000221	0.000325	0.000288	0.000234
Maximum Allowable Ambient Temperature for 100% Duty Cycle	25^{0}C	25^{0}C	25^{0}C	25^{0}C	25^{0}C	25^{0}C	25^{0}C	25^{0}C
Bar Length	4.5m	4.5m	4.5m	4.5m	4.5m	4.5m	4.5m	4.5m
Support Pitch Standard Lateral	1500mm 1125mm	1500mm 1125mm	1500mm 1125mm	1500mm 1125mm	1500mm 1125mm	1500mm 1125mm	1500mm 1125mm	1500mm 1125mm
Minimum Pitch Centers Standard	43mm	43mm	43mm	43mm	43mm	43mm	43mm	43mm
Expansion Sections (Not required for runs less than)	150m	150m	150m	150m	150m	150m	150m	150m
Minimum Bending Radius (Horizontal only, bent at factory)	1.5m	1.5m	1.5m	1.5m	1.5m	1.5m	1.5m	1.5m

Safe-Lec 2 Conductor Bar Covers

	Standard (Orange or Green)	UV Stable (Black)	Medium Heat (Red)
Material	PVC	PVC	Polycarbonate
Dielectric Strength	180 kv/cm	180 kv/cm	240 kv/cm
Surface Resistivity	$10^{11}\Omega$	$10^{11}\Omega$	$>10^{14}\Omega$
Volume Resistivity	$>10^{15}\Omega$/cm	$>10^{15}\Omega$/cm	$>10^{16}\Omega$/cm
Vicat Softening Temperature **Never expose PVC cover to temperatures in excess of 164^0 F (73.3^0 C)**	160^{0}F (71.1^{0}C)	160^{0}F (71.1^{0}C)	250^{0}F (121.1^{0}C)
Flame Test	Self extinguishing	Self extinguishing	Self extinguishing
Oxygen Index	54%	54%	24%
Specific Density	1.5 g/cm^3	1.5 g/cm^3	1.15 g/cm^3

Galvanized Steel Bar

Galvanized Steel Conductor Bars with Splice Installed

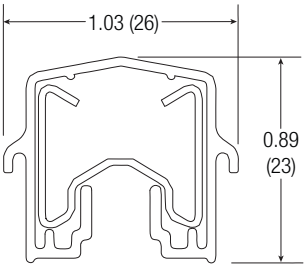

Bar Length: 14.76' (4.5m)

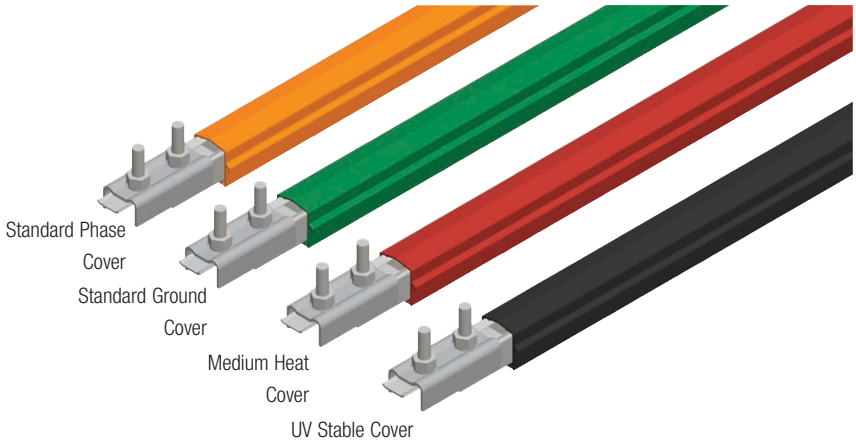

COVER TYPE	100A	Wt lb (kg)	125A	Wt lb (kg)
Standard Phase Cover (Orange)	**310101-J**	**6.36 (2.88)**	**310201-J**	**8.83 (4.01)**
Standard Ground Cover (Green)	**310102-J**	**6.44 (2.92)**	**310202-J**	**8.83 (4.01)**
Medium Heat Cover (Red)	**310103-J**	**6.24 (2.83)**	**310203-J**	**8.65 (3.92)**
Medium Heat Cover (Green)	**310103G-J**	**6.26 (2.84)**	**310203G-J**	**8.69 (3.94)**
UV Stable (Black)	**310101B-J**	**6.50 (2.95)**	**310201B-J**	**8.91 (4.04)**
UV Stable (Green)	**310101G-J**	**6.44 (2.92)**	**310201P-J**	**8.87 (4.02)**

Expansion Sections with Splice Installed

Expansion Sections are used at all structural expansion joints and for systems longer than 492' (150m) to allow for thermal expansion / contraction of the bar. The maximum gap of the Expansion Section is 2.0" (50). The Expansion Section is 14'-9" (4.5m) long and is installed in place of one length of conductor bar.

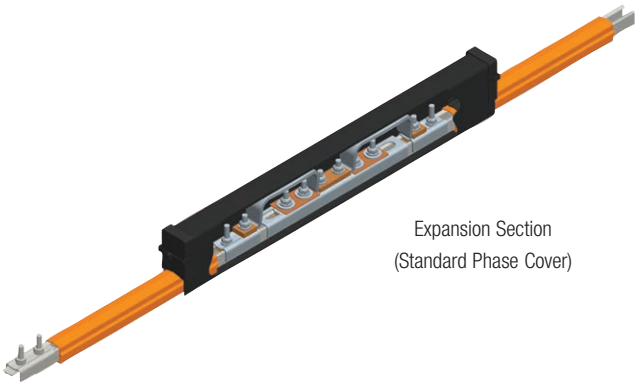

Expansion Section
(Standard Phase Cover)

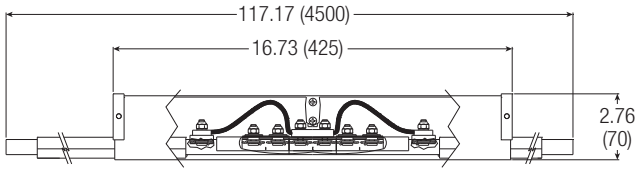

COVER TYPE	100A	Wt lb (kg)	125A	Wt lb (kg)
Standard Phase Cover (Orange)	**310107-J**	**7.91 (3.59)**	**310207-J**	**10.49 (4.76)**
Standard Ground Cover (Green)	**310108-J**	**7.84 (3.56)**	**310208-J**	**10.42 (4.73)**
Medium Heat Cover (Red)	**310109-J**	**7.71 (3.50)**	**310209-J**	**10.29 (4.67)**
Medium Heat Cover (Green)	**310109G-J**	**7.87 (3.57)**	**310209G-J**	**10.43 (4.73)**
UV Stable (Black)	**39130-J**	**7.91 (3.59)**	**39131-J**	**10.49 (4.76)**
UV Stable (Green)	**39130G-J**	**8.07 (3.66)**	**39131G-J**	**10.65 (4.83)**

Copper Bar

Copper Conductor Bars with Splice Installed

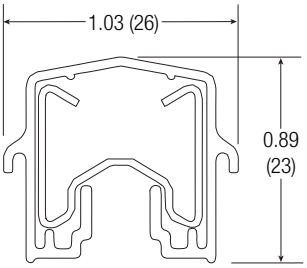

Bar Length: 14.76' (4.5m)

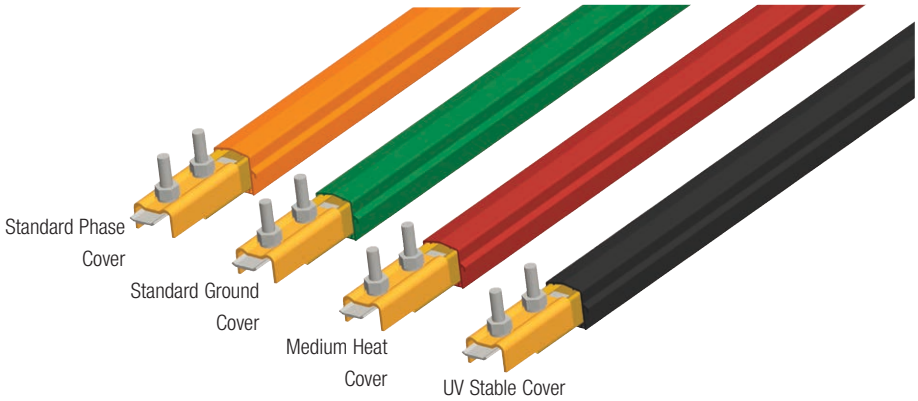

COVER TYPE	160A	Wt lb (kg)	250A	Wt lb (kg)	400A	Wt lb (kg)
Standard Phase Cover (Orange)	**310301-J**	**6.08 (2.76)**	**310401-J**	**7.06 (3.20)**	**310501-J**	**9.97 (4.52)**
Standard Ground Cover (Green)	**310302-J**	**6.08 (2.76)**	**310402-J**	**7.06 (3.20)**	**310502-J**	**9.98 (4.53)**
Medium Heat Cover (Red)	**310303-J**	**5.9 (2.7)**	**310403-J**	**6.88 (3.12)**	**310503-J**	**9.81 (4.45)**
Medium Heat Cover (Green)	**310303G-J**	**5.91 (2.68)**	**310403G-J**	**6.9 (3.13)**	**310503G-J**	**9.81 (4.45)**
UV Stable (Black)	**310301B-J**	**6.0 (2.68)**	**310401B-J**	**7.06 (3.20)**	**310501B-J**	**9.97 (4.52)**
UV Stable (Green)	**310301G-J**	**5.9 (2.7)**	**310401G-J**	**7.06 (3.20)**	**310501G-J**	**9.97 (4.52)**

Expansion Sections with Splice Installed

Expansion Sections are used at all structural expansion joints and for systems longer than 492' (150m) to allow for thermal expansion / contraction of the bar. The maximum gap of the Expansion Section is 2.0" (50). The Expansion Section is 14' 9" (4.5m) long and is installed in place of one length of conductor bar.

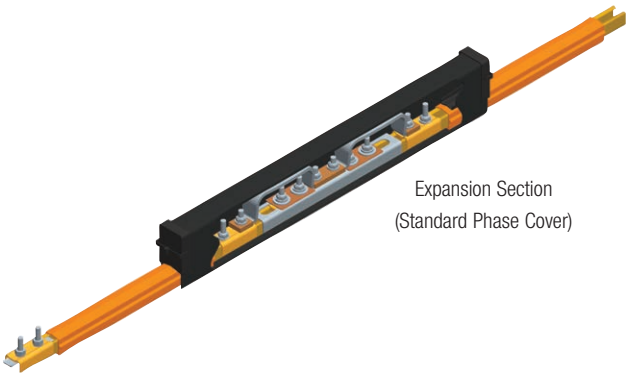

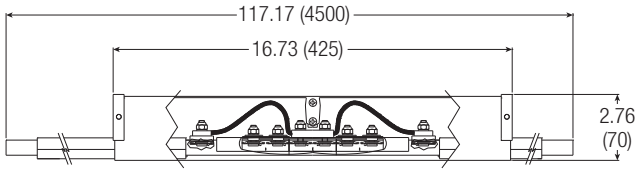

COVER TYPE	160A	Wt lb (kg)	250A	Wt lb (kg)	400A	Wt lb (kg)
Standard Phase Cover (Orange)	**310307-J**	7.60 (3.45)	**310407-J**	8.99 (4.08)	**310507-J**	11.89 (5.39)
Standard Ground Cover (Green)	**310308-J**	7.53 (3.42)	**310408-J**	8.91 (4.04)	**310508-J**	11.82 (5.36)
Medium Heat Cover (Red)	**310309-J**	7.40 (3.36)	**310409-J**	8.78 (3.98)	**310509-J**	11.69 (5.30)
Medium Heat Cover (Green)	**310309G-J**	7.47 (3.39)	**310409G-J**	8.73 (3.96)	**310509G-J**	11.64 (5.28)
UV Stable (Black)	**39132-J**	7.59 (3.44)	**39133-J**	8.97 (4.07)	**39134-J**	11.88 (5.39)
UV Stable (Green)	**39132G-J**	7.65 (3.47)	**39133G-J**	8.93 (4.05)	**39134G-J**	11.84 (5.37)

Aluminum / Stainless Bar

Aluminum / Stainless Steel Conductor Bars with Splice Installed

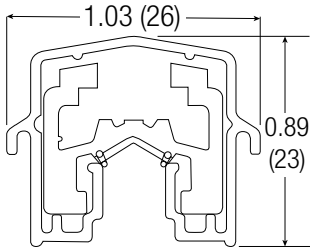

Bar Length: 14.76' (4.5m)

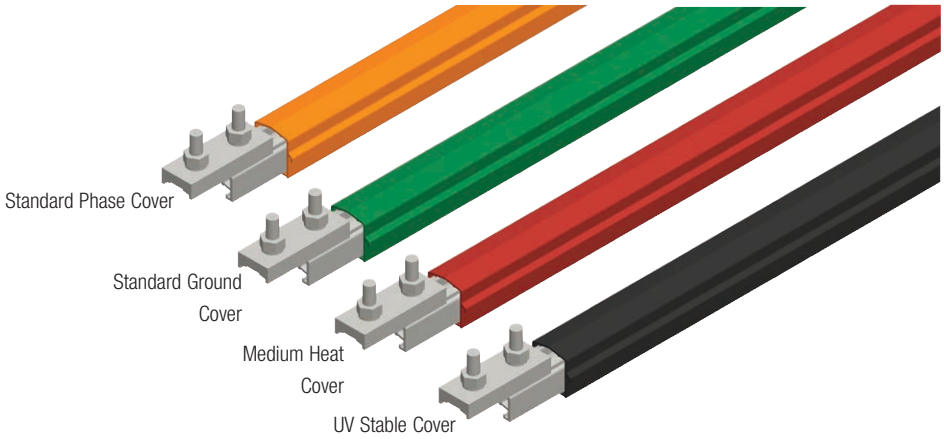

COVER TYPE	200A	Wt lb (kg)	315A	Wt lb (kg)	400A	Wt lb (kg)
Standard Phase Cover (Orange)	**310601-J**	5.24 (2.38)	**310701-J**	5.15 (2.34)	**399101-J**	6.12 (2.78)
Standard Ground Cover (Green)	**310602-J**	5.16 (2.34)	**310702-J**	5.16 (2.34)	**399102-J**	6.12 (2.78)
Medium Heat Cover (Red)	**310603-J**	5.02 (2.28)	**310703-J**	5.02 (2.28)	**399103-J**	6.0 (2.72)
Medium Heat Cover (Green)	**310603G-J**	5.03 (2.28)	**310703G-J**	5.03 (2.28)	**399103G-J**	6.0 (2.72)
UV Stable (Black)	**310601B-J**	5.18 (2.35)	**310701B-J**	5.18 (2.35)	**399101B-J**	6.11 (2.77)
UV Stable (Green)	**310601G-J**	5.18 (2.35)	**310701G-J**	5.18 (2.35)	**399101G-J**	5.87 (2.66)

Expansion Sections with Splice Installed

Expansion Sections are used at all structural expansion joints and for systems longer than 492' (150m) to allow for thermal expansion / contraction of the bar. The maximum gap of the Expansion Section is 2.0" (50). The Expansion Section is 14'- 9" (4.5m) long and is installed in place of one length of conductor bar.

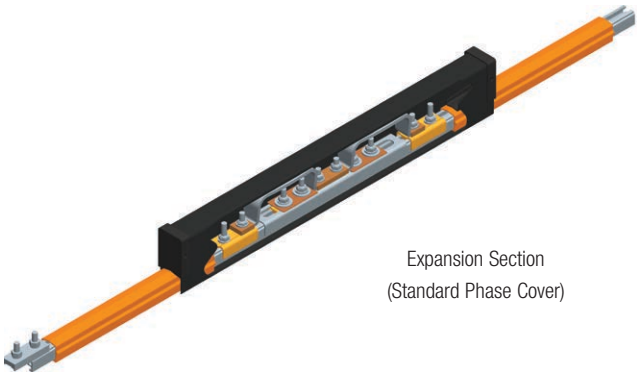

Expansion Section
(Standard Phase Cover)

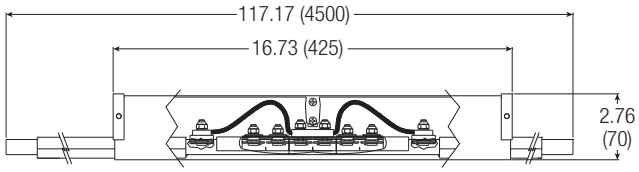

COVER TYPE	200A	Wt lb (kg)	315A	Wt lb (kg)	400A	Wt lb (kg)
Standard Phase Cover (Orange)	**310607-J**	8.20 (3.72)	**310707-J**	6.64 (3.01)	**399107-J**	7.58 (3.44)
Standard Ground Cover (Green)	**310608-J**	6.57 (2.98)	**310708-J**	6.57 (2.98)	**399108-J**	7.58 (3.44)
Medium Heat Cover (Red)	**310609-J**	6.51 (2.95)	**310709-J**	6.72 (3.05)	**399109-J**	7.38 (3.35)
Medium Heat Cover (Green)	**310609G-J**	6.39 (2.90)	**310709G-J**	6.39 (2.90)	**399109G-J**	7.3 (3.31)
UV Stable (Black)	**39135-J**	6.79 (3.08)	**39136-J**	6.79 (3.08)	**399107B-J**	7.58 (3.44)
UV Stable (Green)	**39135G-J**	6.44 (2.92)	**39136G-J**	5.95 (2.70)	**399107G-J**	7.3 (3.31)

Splice Joints & Joint Compound

Splice Joints - Steel & Copper

One splice joint is included with bar part numbers ending with "-J" (see Pgs. 14-16)

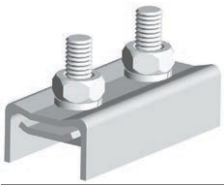

Type	Part No.	Wt lb (kg)
Steel	310872	0.11 (0.05)

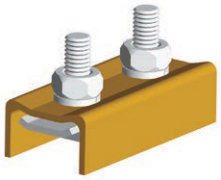

Type	Part No.	Wt lb (kg)
Copper	310873	0.12 (0.05)

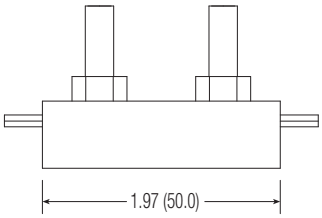

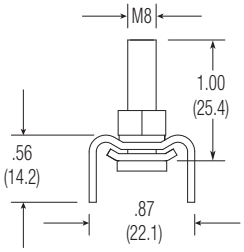

Splice Joint - Aluminum

One splice joint is included with bar part numbers ending with "-J" (see Pgs. 14-16)

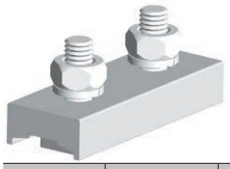

Type	Part No.	Wt lb (kg)
Aluminum	310874	0.11 (0.05)

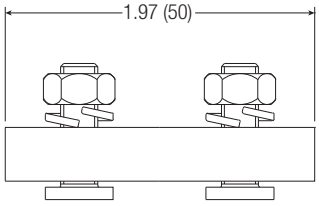

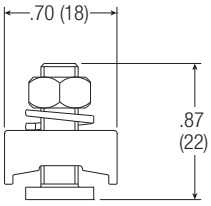

Joint Compound

Joint compound is applied to the contact surfaces at every joint on aluminum systems. One tube is included with every aluminum/stainless bar system at a nominal cost and is sufficient for over 300 connections (equal to a 1000 foot long system with four phases).

Part No.	Wt lb (kg)
15629	.50 (0.225)

Joint Covers & Power Feeds

Joint Covers

Must be ordered separately - one per splice joint.

Standard Phase Joint Cover

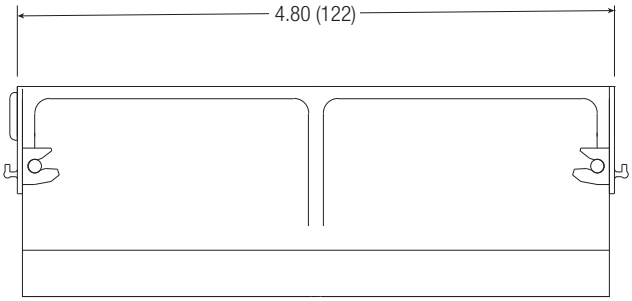

TYPE	Part No.	Wt lb (kg)
Standard Cover (UV Black)	**310850B**	.05 (0.027)
Medium Heat Cover (Red)	**310855**	.06 (0.027)

Joint Power Feeds

The Joint Power Feed is usually installed on top of a splice joint. Cable lugs are customer supplied.

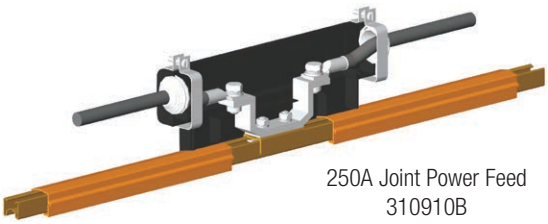

250A Joint Power Feed
310910B

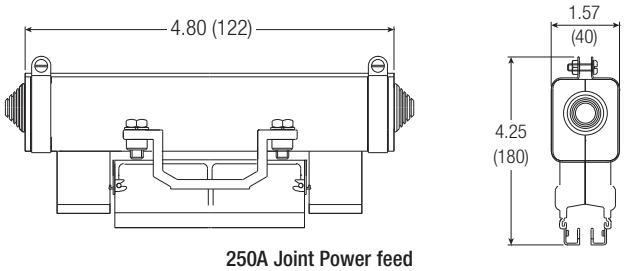

250A Joint Power feed

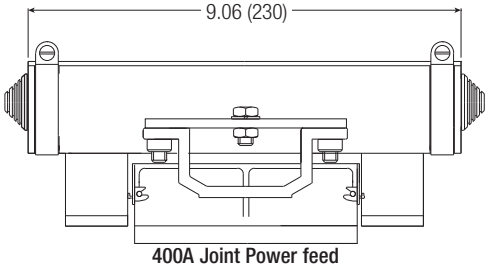

400A Joint Power feed

TYPE	Up to 250A	250A to 400A
Standard Cover (Black)	**310910B**	**310912B**
Medium Heat Cover (Red)	**310913**	**310915**
No. of Cable Connections	2	2
Max. Cable Size	#3/0 (95mm^2)	300kcmil (150mm^2)
Wt lb (kg)	0.53 (0.24)	0.66 (0.30)

Power Feeds & End Caps

End Power Feed

The End Power Feed is installed in place of an end cover. Maximum cable connection size: 6 AWG (16mm²). These are suitable for 100A Galvanized Steel Bar only.

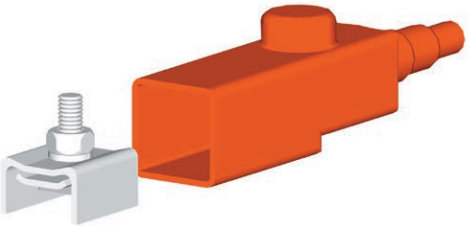

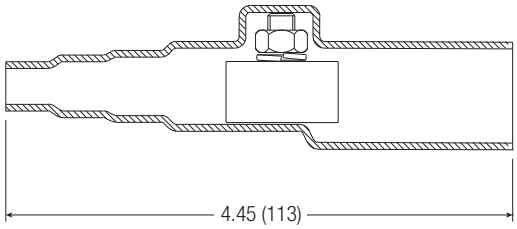

Part No.	Wt lb (kg)
310911	0.1 (0.045)

End Caps

End Caps are insulated covers installed at the ends of the conductor system. Transfer Caps transfer the collectors across switch gaps up to 0.40" (10mm) wide.

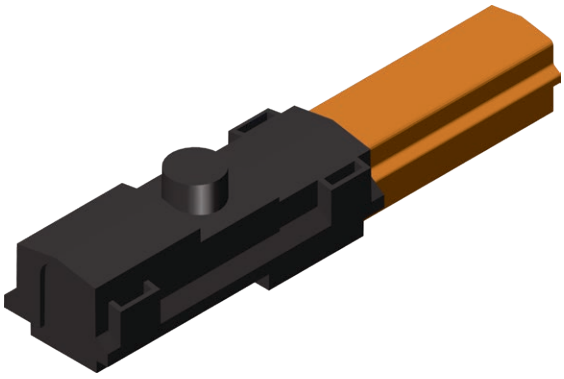

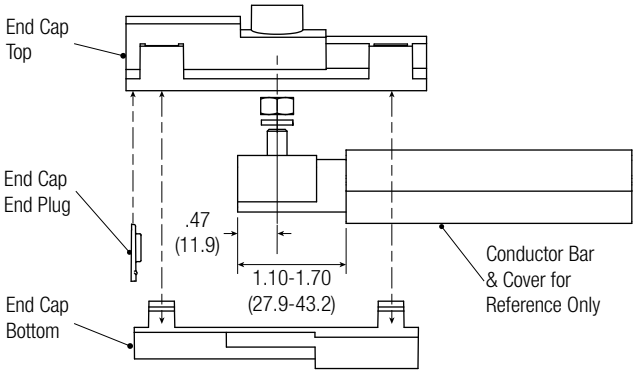

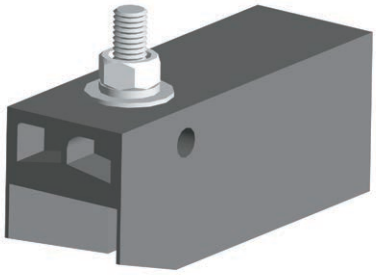

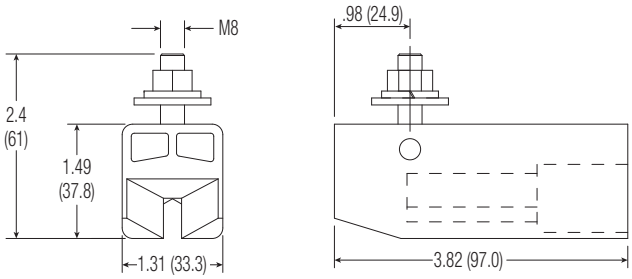

Transfer Cap Tolerances: Vertical tolerance ± 0.20 (5)
Horizontal tolerance ± 0.08 (2)

TYPE	Material	Part No.	Wt lb (kg)
End Cap Steel / Copper Bar	PVC	**SL2ENDCAP-CU**	0.09 (0.04)
End Cap Aluminum Bar	PVC	**SL2ENDCAP-AL**	0.05 (0.02)
Transfer Cap	Polycarbonate	**310951**	0.24 (0.11)

Hanger Clamps

Hanger Clamps Standard

Maximum support bracket spacing is 59.1" (1.5m) Hardware is plated steel unless noted otherwise.

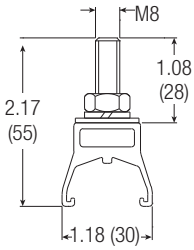

Single Pole Hanger Clamp | Standard Mount

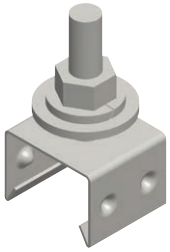

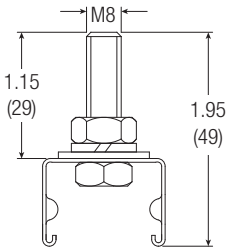

Single Pole Stainless Steel Hanger Clamp | Standard Mount

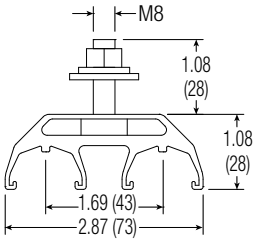

Dual Pole Hanger Clamp | Standard Mount

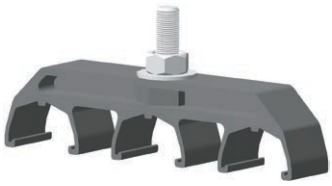

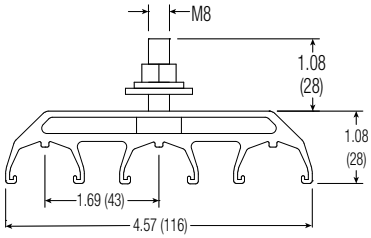

Three Pole Hanger Clamp | Standard Mount

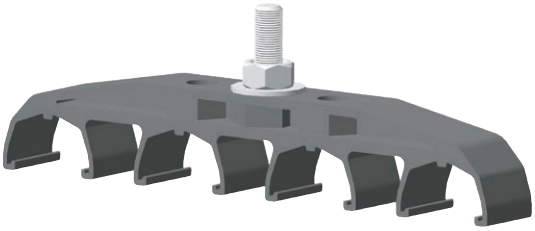

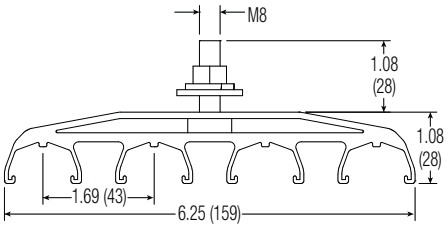

Four Pole Hanger Clamp | Standard Mount

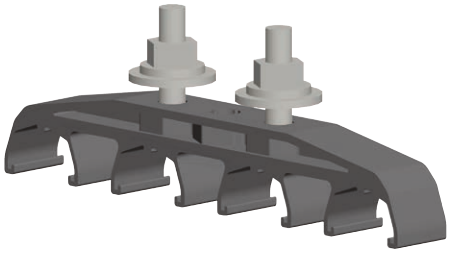

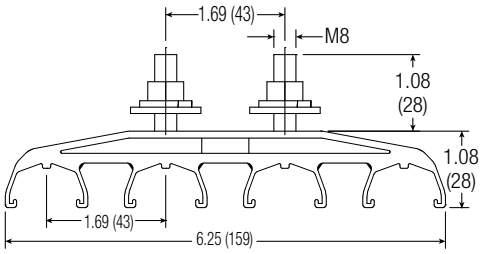

Four Pole Hanger Clamp | Lateral Mount

TYP	Mounting Orientation		Acetyl (Black) 160° Max.	Wt lb (kg)	Polycarbonate (Red) 250° Max.	Wt lb (kg)	Stainless Steel Hardware / Plastic Hanger	Wt lb (kg)	Stainless Steel	Wt lb (kg)
	Standard	Lateral								
Single Pole	X	X	**310824**	**0.07 (0.03)**	**310829**	**0.09 (0.04)**	**310919**	**0.07 (0.03)**	**399416B**	0.09 (0.04)
Two Pole	X	X	**310882**	**0.11 (0.05)**	**310899**	**0.13 (0.06)**	**-**	**-**	**-**	-
Three Pole	X	X	**310861**	**0.13 (0.06)**	**310871**	**0.14 (0.06)**	**-**	**-**	**-**	-
Four Pole	X		**310821**	**0.15 (0.07)**	**310857**	**0.16 (0.07)**	**-**	**-**	**39768**	0.14 (0.06)
Four Pole		X	**310835**	**0.23 (0.10)**	**310859**	**0.26 (0.12)**	**-**	**-**	**50120**	0.13 (0.06)

Hanger Clamps & Anchor Clamps

Hanger Clamps with Insulator

In particularly dusty, humid, or outdoor environments, hangers with insulators should be used. Two-Part Hangers are ideal for installation where conductor bar must be repeatedly installed and removed.

Acetyl

Polycarbonate

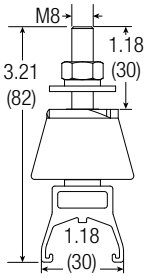

Stainless Steel

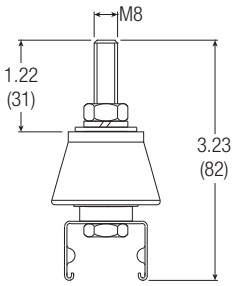

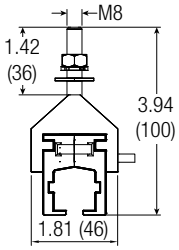

Single Pole - Two Part

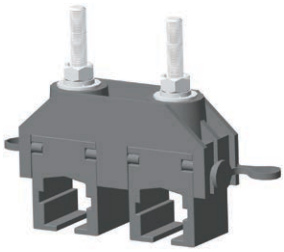

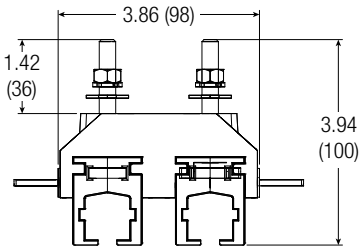

Two Pole - Two Part

TYPE	Material	Max. Temp	Part No.	Wt lb (kg)
Single Pole	Acetyl (Black)	160^0 F	**310918**	0.17 (0.08)
Single Pole	Polycarbonate (Red)	250^0 F	**310834**	0.17 (0.08)
Single Pole	Stainless Steel	250^0 F	**38779**	0.20 (0.90)
Single Pole, Two-Part	Acetyl (Black)	160^0 F	**399544**	0.07 (0.03)
Two Pole, Two-Part	Acetyl (Black)	160^0 F	**399647**	0.16 (0.07)

Anchor Clamps

Anchor points are usually situated in the middle of a conductor system. Additional anchor points are required for systems with expansion sections.

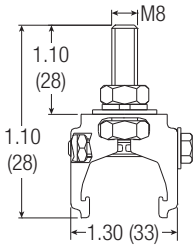

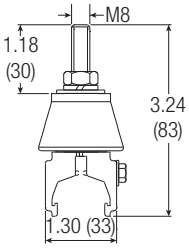

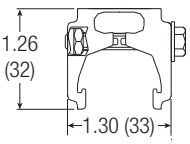

TYPE	Max. Temp	Part No. Plated Steel Hardware	Wt lb (kg)	Part No. Stainless Steel Hardware	Wt lb (kg)
Standard	250^0 F	**310832**	**0.16 (0.07)**	**310833**	0.15 (0.07)
With Insulator	250^0 F	**310969**	**0.27 (0.12)**	**38780B**	0.25 (0.11)
Without Top Bolt (Two req'd per anchor point)	250^0 F	**310831**	**0.16 (0.07)**	**38220**	0.08 (0.04)

Pickup Guides

Pickup Guides

Pick-up Guides are used on discontinuous systems to guide collectors on and off the conductors. Guide housing is black painted steel. Guide surfaces are PVC. Molded guides are Polycarbonate.

Not recommended for lateral mounting

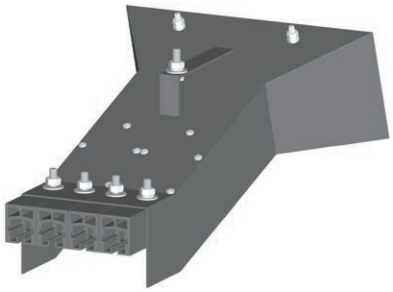

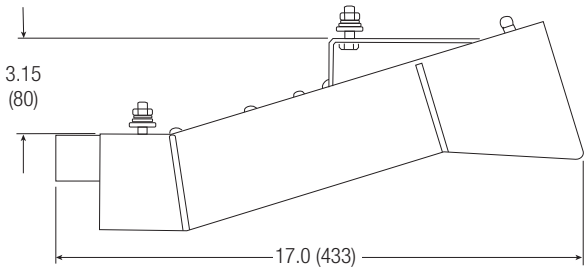

TYPE	Part No.	Wt lb (kg)
Single Pole	**310920**	3.06 (1.39)
Three Pole	**399502**	4.76 (2.15)
Four Pole	**310929**	5.65 (2.56)

Power Interrupting Sections

Power Interrupting Sections with Splice Installed

Power Interrupting Sections provide a dead or safe zone between adjacent, separately powered zones of the system. Each section is 14' - 9" (4.5m) long and is installed in place of one length of conductor bar. It is recommended that Power Interrupting Sections are not mounted in ground conductors so that the ground is never disconnected. These sections can only be used in dry, clean conditions. For details on how Power Interrupting Sections are used, see Appendix IV, Pgs. 63-64.

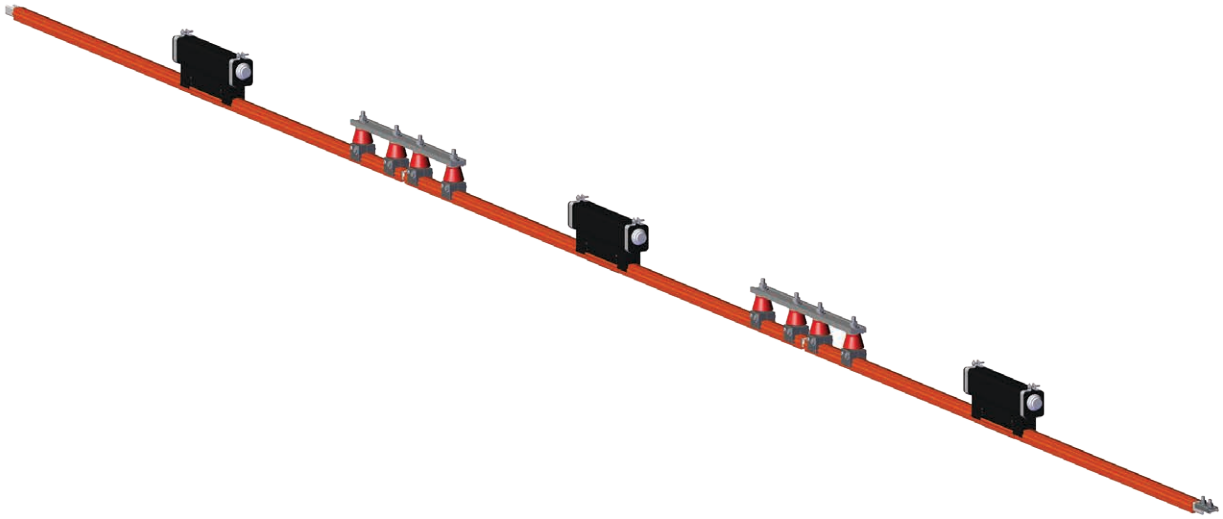

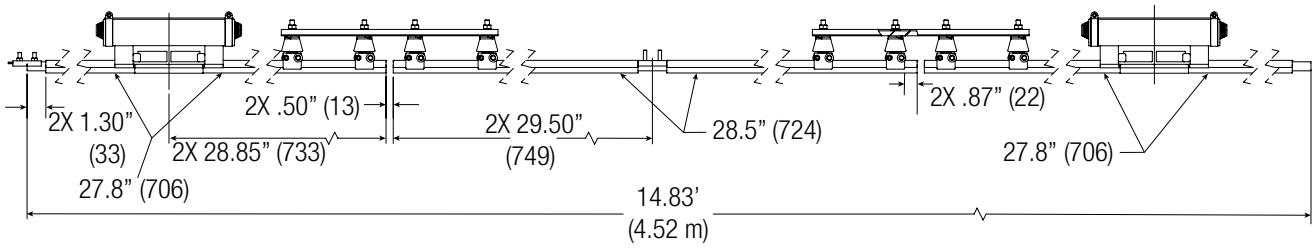

Galvanized Steel Bar	Current Rating			
Cover Type	100A	Wt lb (kg)	125A	Wt lb (kg)
Standard Phase (Orange)	399700-J	14.35 (6.50)	399700-J	14.35 (6.50)
Medium Heat (Red)	399702-J	14.25 (6.46)	399702-J	14.25 (6.46)
UV Stable (Black)	399701-J	14.35 (6.50)	399701-J	14.35 (6.50)

Aluminum / Stainless Steel Bar	Current Rating					
COVER TYPE	200A	Wt lb (kg)	315A	Wt lb (kg)	400A	Wt lb (kg)
Standard Phase (Orange)	399709-J	10.50 (4.76)	399712-J	10.70 (4.85)	399715-J	11.65 (5.28)
Medium Heat (Red)	399711-J	10.39 (4.71)	399714-J	10.60 (4.81)	399717-J	11.56 (5.24)
UV Stable (Black)	399710-J	10.50 (4.76)	399713-J	10.70 (4.85)	399716-J	11.65 (5.28)

Copper Bar	Current Rating					
COVER TYPE	160A	Wt lb (kg)	250A	Wt lb (kg)	400A	Wt lb (kg)
Standard Phase (Orange)	399703-J	12.31 (5.58)	399703-J	12.31 (5.58)	399706-J	15.59 (7.07)
Medium Heat (Red)	399705-J	12.38 (5.62)	399705-J	12.38 (5.62)	399708-J	15.50 (7.03)
UV Stable (Black)	399704-J	12.49 (5.67)	399704-J	12.49 (5.67)	399707-J	15.59 (7.07)

Collectors

Safe-Lec 2 “V-Contact” Collectors articulate to accurately track in the conductor bar groove for superior conductivity. Includes long-wearing copper graphite shoe (in holder) and shunt wires as noted below. The green “ground” (earth) collectors are available without “deflector”, or with either right-hand or left-hand deflector. Deflectors prevent the ground collector from coming in contact with adjacent phase collectors. For recommendations about choosing collectors see Appendix I, Pg. 57.

50A Collectors

Collector shoe shunt wire is integrated into the arm. Incoming cable is connected to the terminal lug at the base of the collector (maximum 8 AWG).

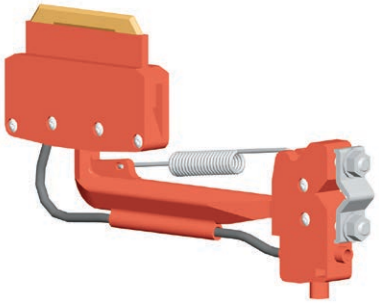

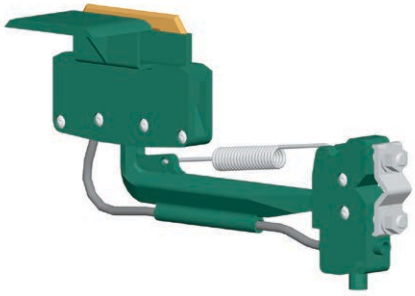

TYPE	Part No.	Wt lb (kg)
Phase (Red)	**XA-399360**	0.84 (0.381)
Ground witout Deflector	**XA-399380**	0.85 (0.385)
Ground with Right Hand Deflector	**XA-399373**	0.87 (0.394)
Ground with Left Hand Delfector	**XA--399372**	0.87 (0.394)

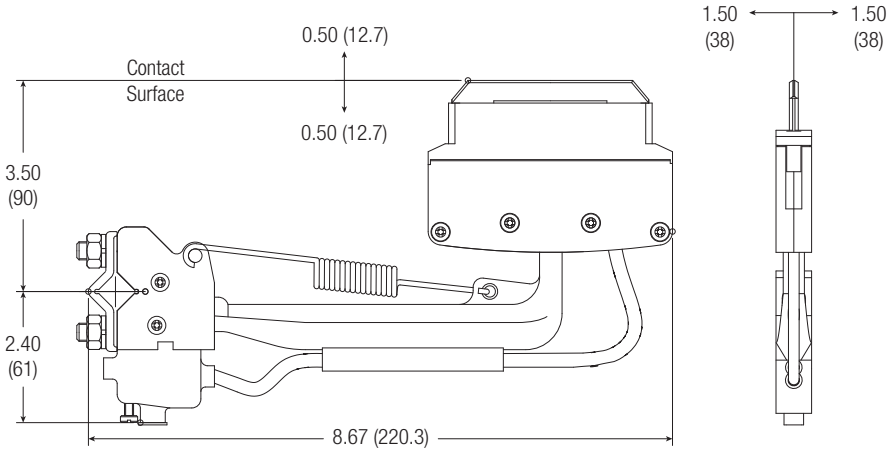

Note: The above 50 amp collectors are not UL listed, for UL listed options please consult the factory.

100A Collectors

Single and Tandem collectors with easy installation and serviceability. Includes 1M pigtail of 4AWG cable.

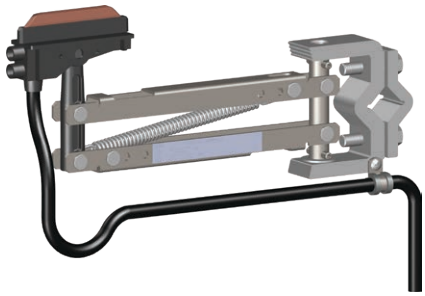

TYPE	Amperage	Part No.	Wt lb (kg)
Single Phase Collector with 1 Meter Pigtail	100	**XA-SL2C-100SP-1M**	3.51 (1.59)
Single Ground Collector with 1 Meter Pigtail	100	**XA-SL2C-100SG-1M**	3.57 (1.62)
Tandem Phase Collector with 1 Meter Pigtails	200	**XA-SL2C-100TP-1M**	8.56 (3.88)
Tandem Ground Collector with 1 Meter Pigtails	200	**XA-SL2C-100TG-1M**	8.69 (3.94)
Tandem Phase Collector with 1 Meter Pigtails and Cable Terminators	200	**XA-SL2C-100TPY-1M**	8.68 (3.93)
Tandem Ground Collector with 1 Meter Pigtails and Cable Terminators	200	**XA-SL2C-100TGY-1M**	8.81 (4.00)

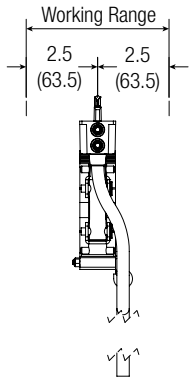

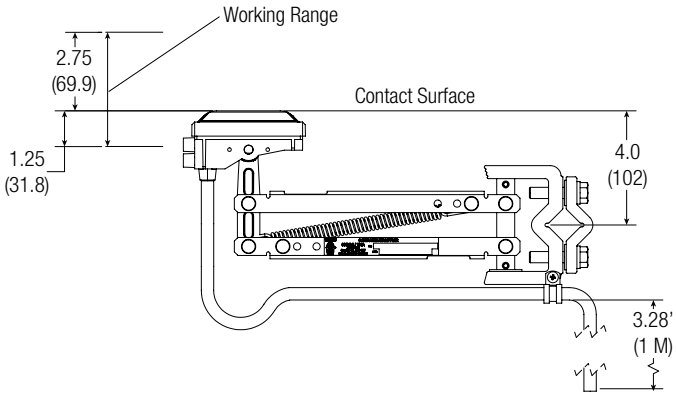

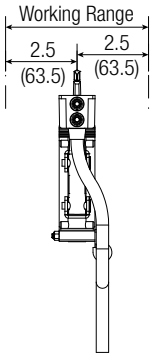

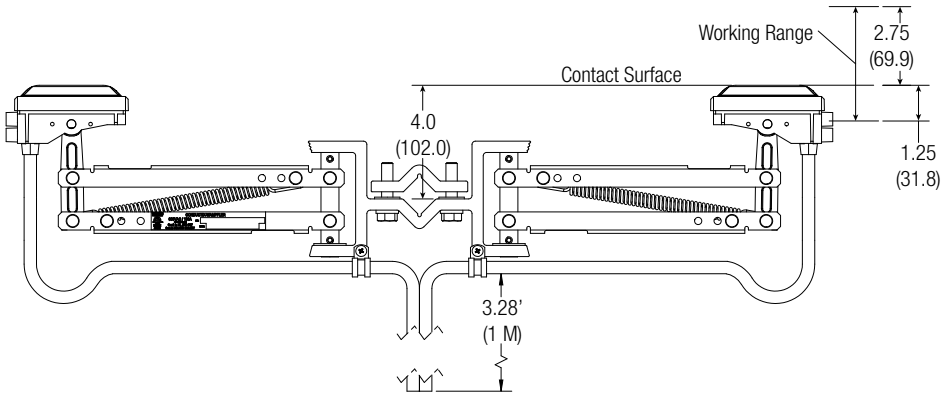

Collectors & Shoes

200A Collectors

Single and Tandem collectors with easy installation and serviceability. Includes 1M pigtail of 2AWG cable.

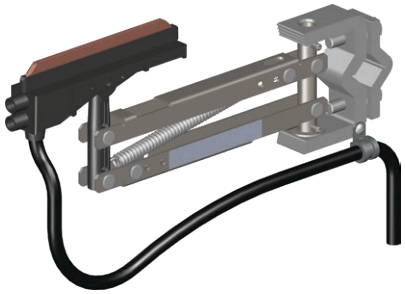

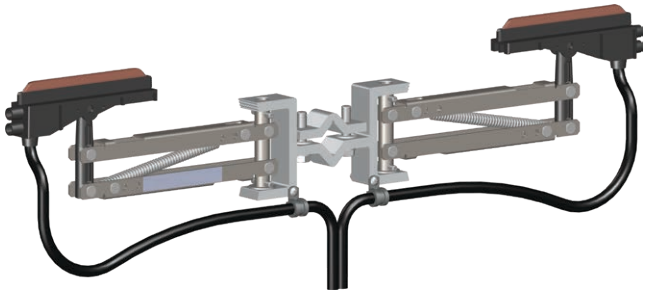

Type-Color	Amperage	Part No.	Wt lb (kg)
Single Phase Collector with 1 Meter Pigtail	200	**XA-SL2C-200SP-1M**	**3.99 (1.81)**
Single Ground Collector with 1 Meter Pigtail	200	**XA-SL2C-200SG-1M**	**4.03 (1.83)**
Tandem Phase Collector with 1 Meter Pigtails	400	**XA-SL2C-200TP-1M**	**10.03 (4.55)**
Tandem Ground Collector with 1 Meter Pigtails	400	**XA-SL2C-200TG-1M**	**10.16 (4.61)**
Tandem Phase Collector with 1 Meter Pigtails and Cable Terminators	400	**XA-SL2C-200TPY-1M**	**10.16 (4.61)**
Tandem Ground Collector with 1 Meter Pigtails and Cable Terminators	400	**XA-SL2C-200TGY-1M**	**10.30 (4.67)**

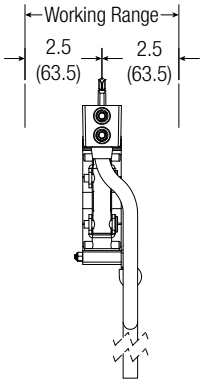

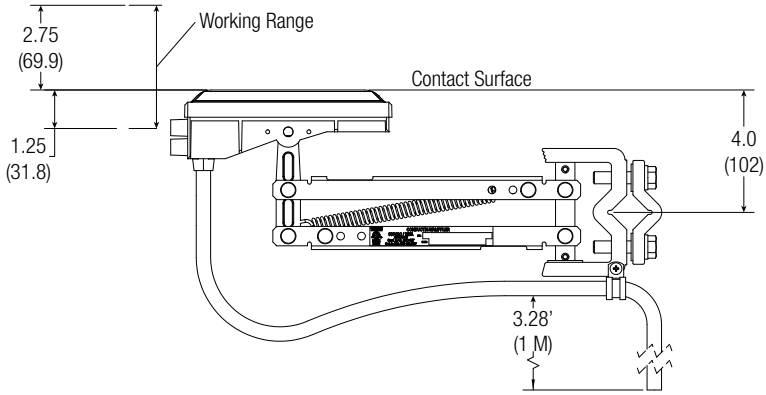

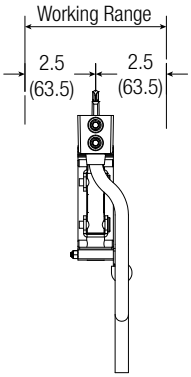

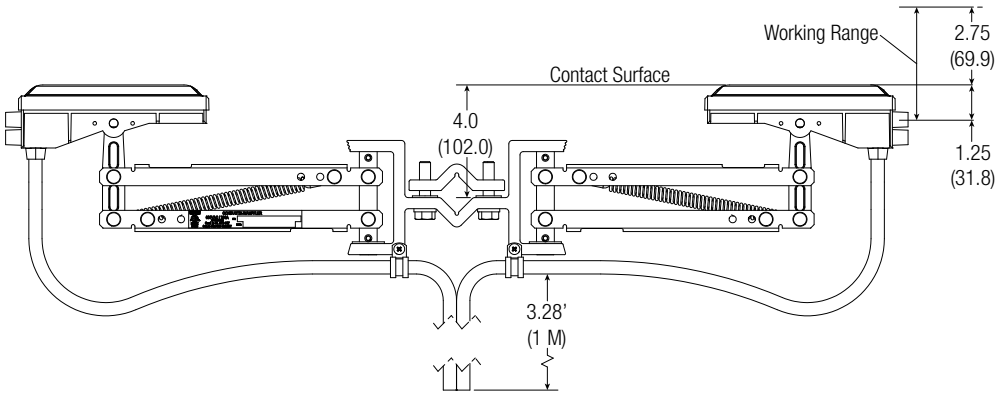

Collectors & Shoes

Lateral Mount Collectors and Pickup Guides

Lateral Mount Collectors are ONLY available in single configuration.

Type-Color	Amperage	Part No.	Wt lb (kg)
Single Phase Lateral Mount Collector with 1 Meter Pigtail	100	**XA-SL2C-100SP-1M-LATL**	**3.52 (1.65)**
Single Ground Lateral Mount Collector with 1 Meter Pigtail	100	**XA-SL2C-100SG-1M-LATL**	**3.59 (1.63)**
Single Phase Lateral Mount Collector with 1 Meter Pigtail	200	**XA-SL2C-200SP-1M-LATL**	**10.16 (4.61)**
Single Ground Lateral Mount Collector with 1 Meter Pigtail	200	**XA-SL2C-200SG-1M-LATL**	**10.16 (4.61)**

Type-Color	Amperage	Part No.	Wt lb (kg)
Single Phase for Pick-up Guide Use with 1 Meter Pigtail	100	**XA-SL2C-100SX-1M-PG**	**3.57 (1.62)**

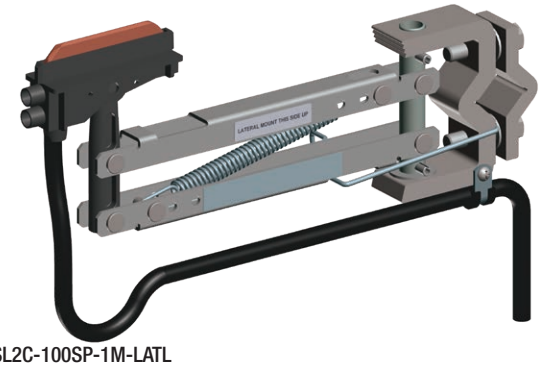

XA-SL2C-100SP-1M-LATL

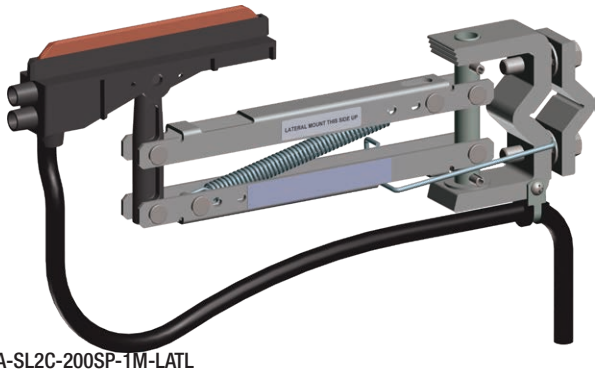

XA-SL2C-200SP-1M-LATL

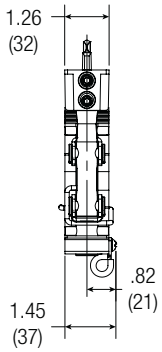

Shown without cable for clarity

XA-SL2C-100SP-1M-LATL

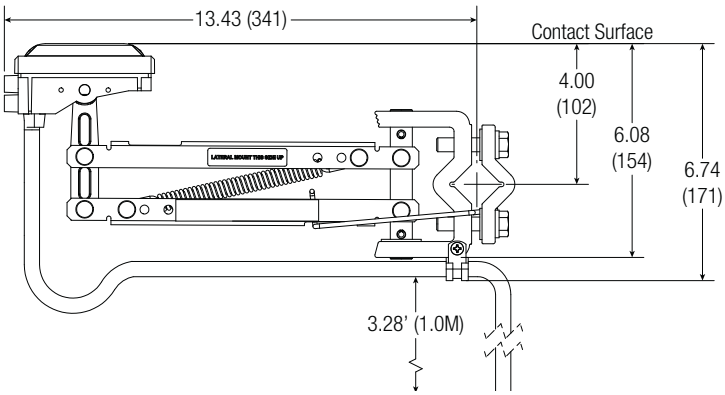

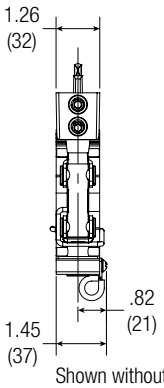

Shown without cable for clarity

XA-SL2C-200SP-1M-LATL

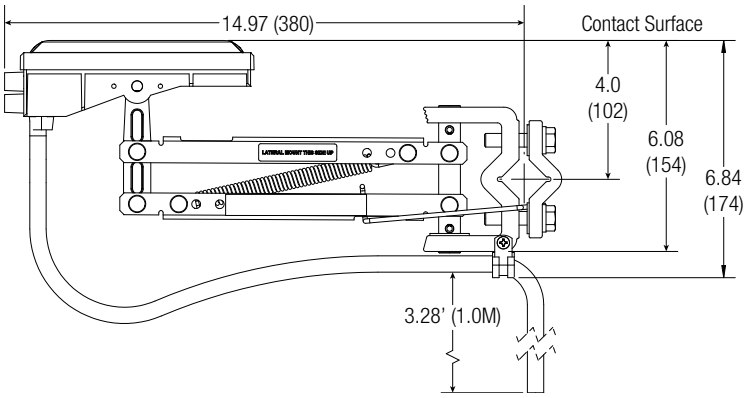

Collectors, Shoes, Ground Flags, Terminators

Collector Shoe & Holder

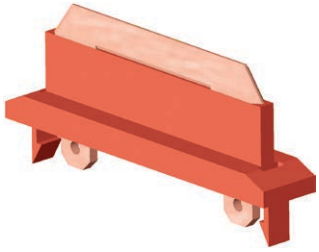

50 Amp Collector Shoe and Holder

100 Amp Collector Shoe

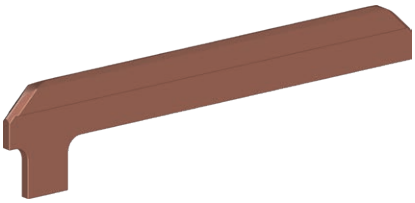

200 Amp Collector Shoe

Current Rating	50A Phase (Red)	50A Ground (Green)	50A with Deflector (Green)	100 Amp	200 Amp
Part No.	**XA-310993**	**XA-399357**	**XA-399356**	**XA-577940**	**XA-577947**
Wt lb (kg)	0.19 (0.09)	0.18 (0.08)	0.35 (0.16)	0.13 (0.06)	0.26 (0.12)

Ground Flag for 100 Amp & 200 Amp Collectors

Ground Flag can be added to any 100 Amp or 200 Amp Collector to indicated the Ground Rail.

Ground Flag for Collectors	
Part No.	**XA-590062**

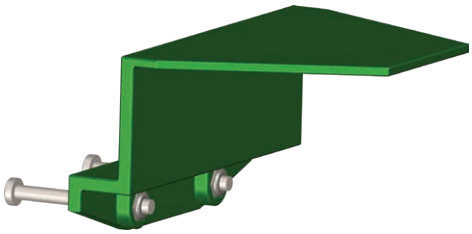

3 Tap Y Terminator Connector

The 3 Tap Y Terminator Collector is a UL approved Connector for Pigtail Terminations, allowing a clean, finished and UL approved connection. These can be added to any 100 Amp or 200 Amp Collector or can be ordered pre-installed on the Collectors.

3 Tap Y Connector	
Part No.	**XA-589312**

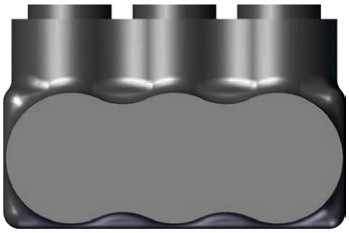

Flange Brackets

The various mounting brackets shown on this pages 26-29 are used to mount Safe-Lec 2 in many different configurations to suit the application. The diagram shown at the left illustrates how the various brackets are mounted to the I-beam. **All brackets are zinc plated unless noted otherwise.**

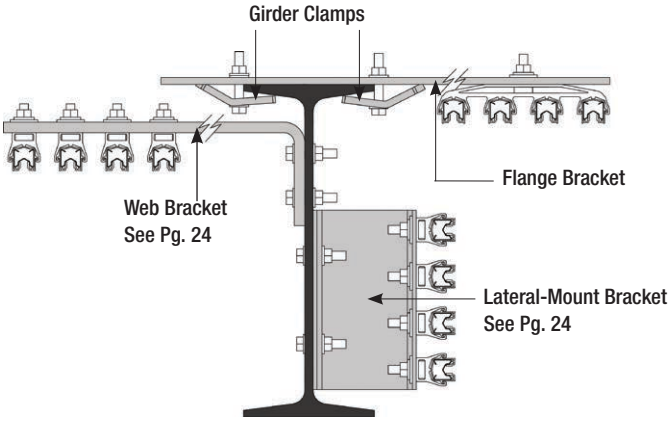

Example Bracket Installations

Recommended Max. Bracket Spacing

Application	Collectors Coming Into	Spacing - In. (M)
Vertical Entry	Bottom of rail	59.0 (1.50)
Lateral Entry	Side of rail	44.3 (1.13)
Curves	Bottom of rail	44.3 (1.13)

Single Sided Flange Brackets

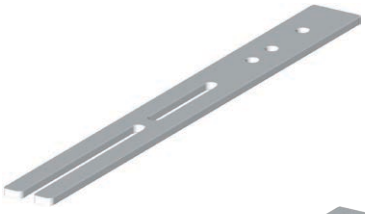

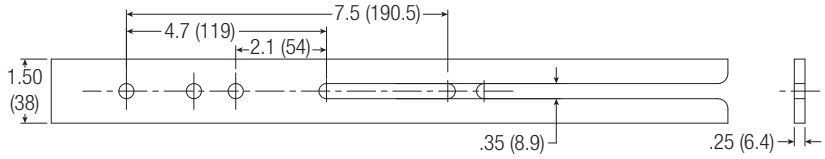

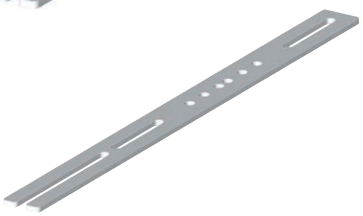

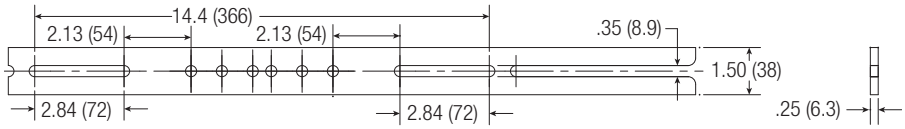

For Beam Flange:	Part No.	Wt lb (kg)
3.15” to 6.10” (80 to 155 mm)	**310980**	1.42 (0.64)
3.15” to 6.10” (80 to 155 mm)	**579442** stainless steel	
6.10” to 12.01” (155 to 305 mm)	**310982**	1.95 (0.88)
6.10" to 12.01" (155 to 305 mm)	**530987** stainless steel	1.62 (0.73)

Flange Brackets

Double Sided Flange Brackets

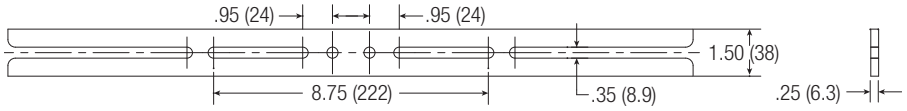

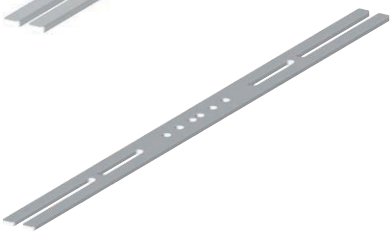

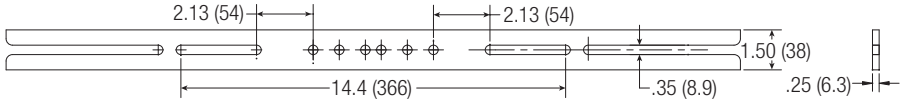

For Beam Flange: In. (mm)	Part No.	Wt lb (kg)
3.15 to 7.28 (80 to 185)	**310981**	1.85 (0.84)
7.28 to 12.01 (185 to 305)	**310983**	2.42 (1.10)

Girder Clamps

Two required with each flange bracket.

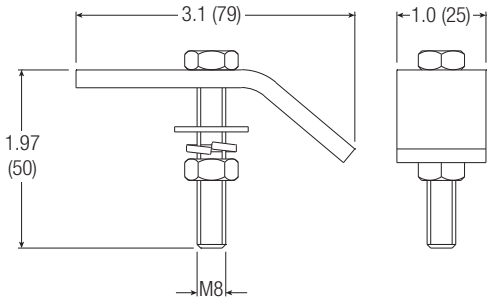

Part No.	Wt lb (kg)
51142	0.27 (0.12)
537183 stainless steel	0.28 (0.13)

Web Brackets

Web Brackets

For mounting conductors horizontally to the web of the I-Beam. See drawing at the top of Pg. 26.

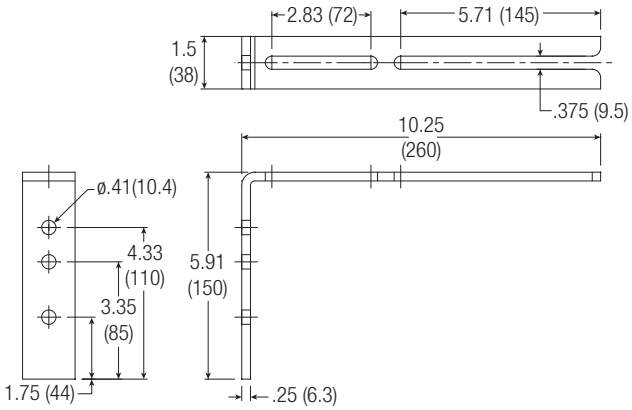

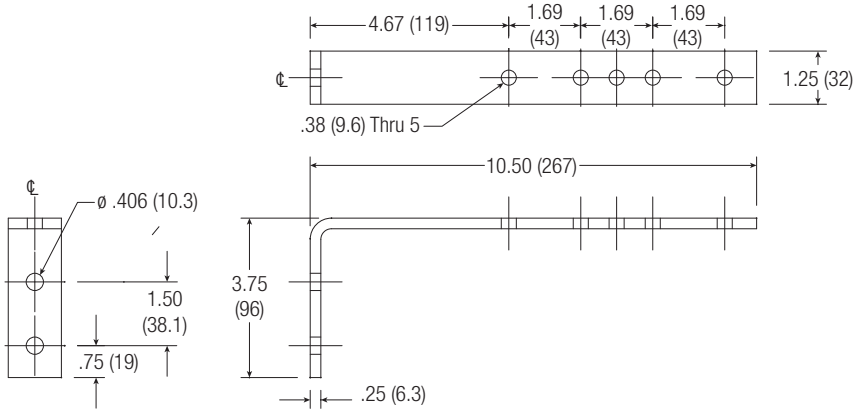

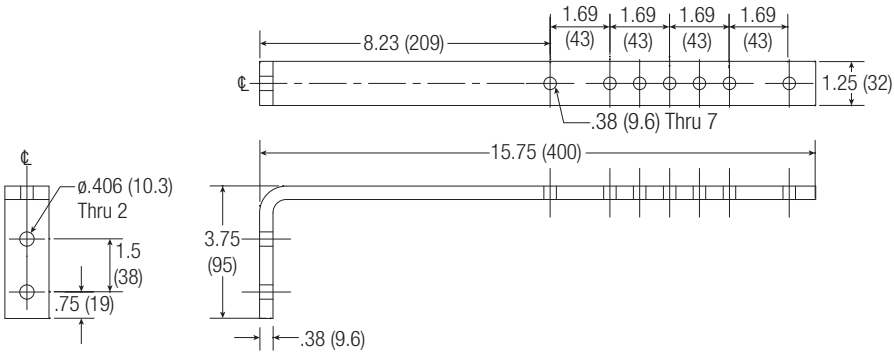

Length	Part No.	Wt lb (kg)
10.23 (260)	**310984**	1.34 (0.61)
10.50 (267)	**36198**	1.21 (0.55)
10.50 (267) - Stainless Steel	**39948**	1.19 (0.54)
15.75 (400)	**36197**	2.39 (1.08)

Mounting & Collector Brackets

Lateral Mount Bracket

For mounting conductors laterally to the web of the I-Beam. See drawing at the top of Pg. 26.

Part No.	Wt lb (kg)
399517	1.64 (0.74)

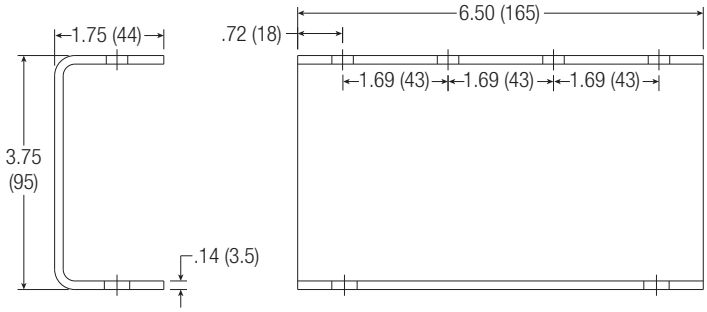

Collector Brackets

For mounting collectors to the moving vehicle.

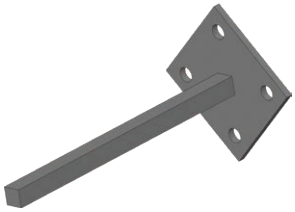

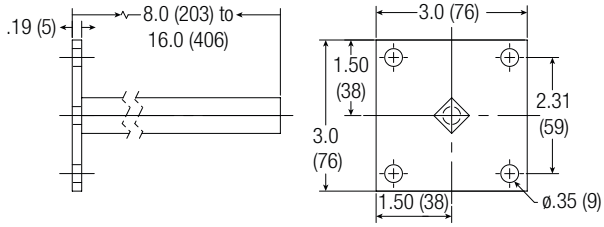

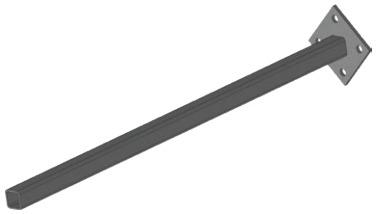

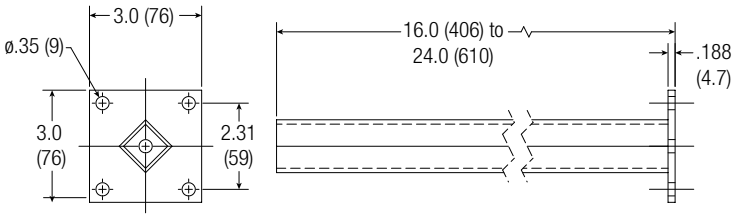

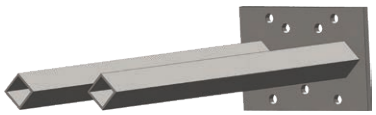

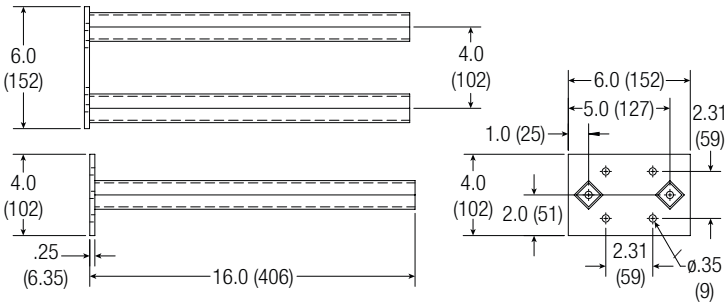

TYPE	Post Size in. (mm)	Part No.	Wt lb (kg)
Single Post	0.50 (13)	**39618**	1.01 (0.46)
Double Post	0.50 (13)	**39050**	3.9 (1.77)
Single Post	1.00 (25)	**39617**	1.72 (0.78)
Double Post	1.00 (25)	**37863**	4.35 (1.97)

Splice Hardware Kits

For 100, and 125 Amp Galvanized Steel Systems

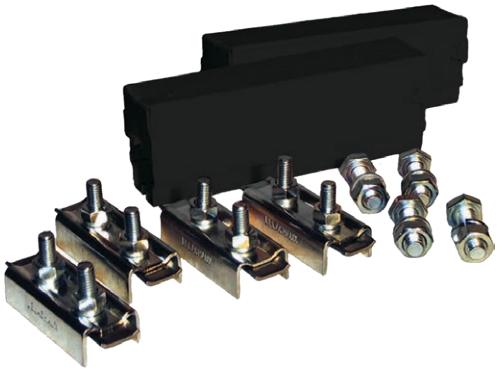

Includes:

- 4 Steel Splice Assemblies
- 2 Splice Covers
- 4 Bolts, Nuts, and Washers for the Bar Hangers

Description	Part No.	Wt lb (kg)
Hardware Kit, 100, or 125 Amp	**37906**	0.76 (0.34)

For 160, 250 and 400 Amp Copper Systems

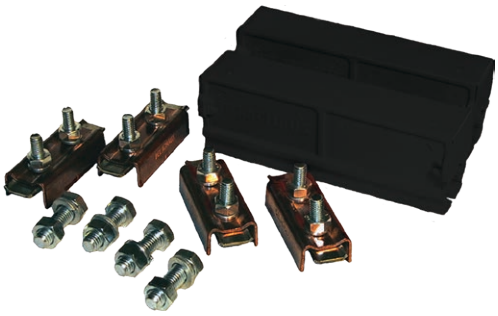

Includes:

- 4 Copper Splice Assemblies
- 2 Splice Covers
- 4 Bolts, Nuts, and Washers for the Bar Hangers

Description	Part No.	Wt lb (kg)
Hardware Kit, 160, 250, or 400 Amp	**37907**	0.76 (0.34)

For 200, 315 and 400 Amp Aluminum Systems

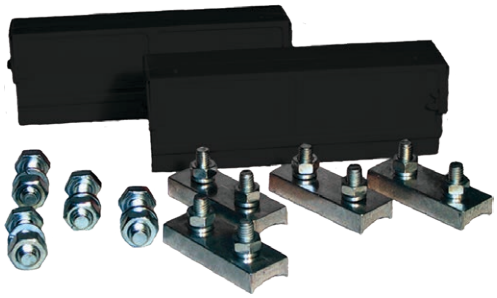

Includes:

- 4 Aluminum Splice Assemblies
- 2 Splice Covers
- 4 Bolts, Nuts and Washers for the bar hangers

Description	Part No.	Wt lb (kg)
Hardware Kit, 200, 315, or 400 Amp	**37908**	0.57 (0.26)

Cleaning Shoe (Cast Iron)	50 Amp
Part No.	**39157**
Wt lb (kg)	**1.0 (0.45)**

Installed Dimensions

End View - Standard Hanger Clamps

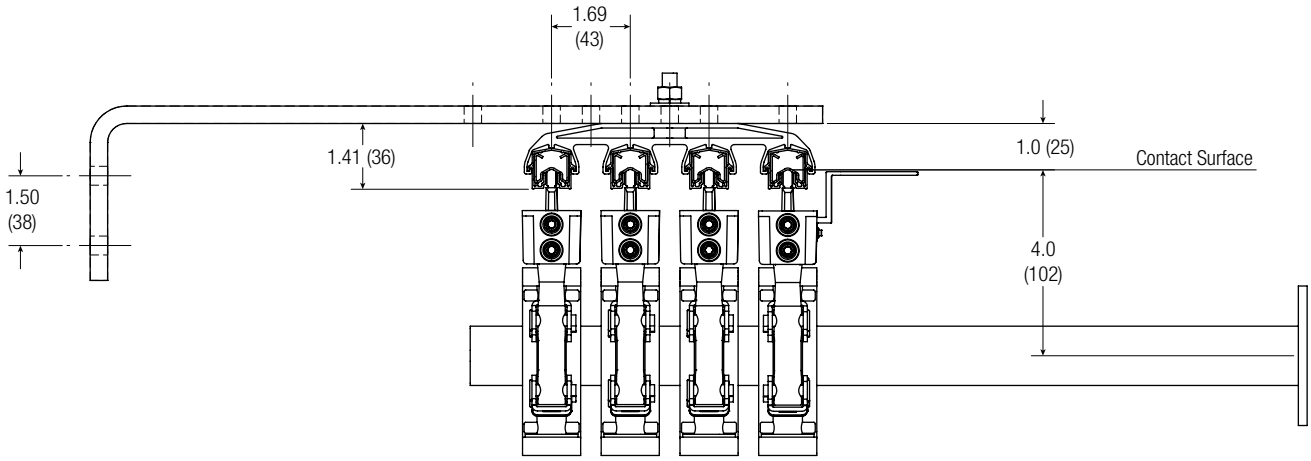

End View - Hanger Clamps with Insulator

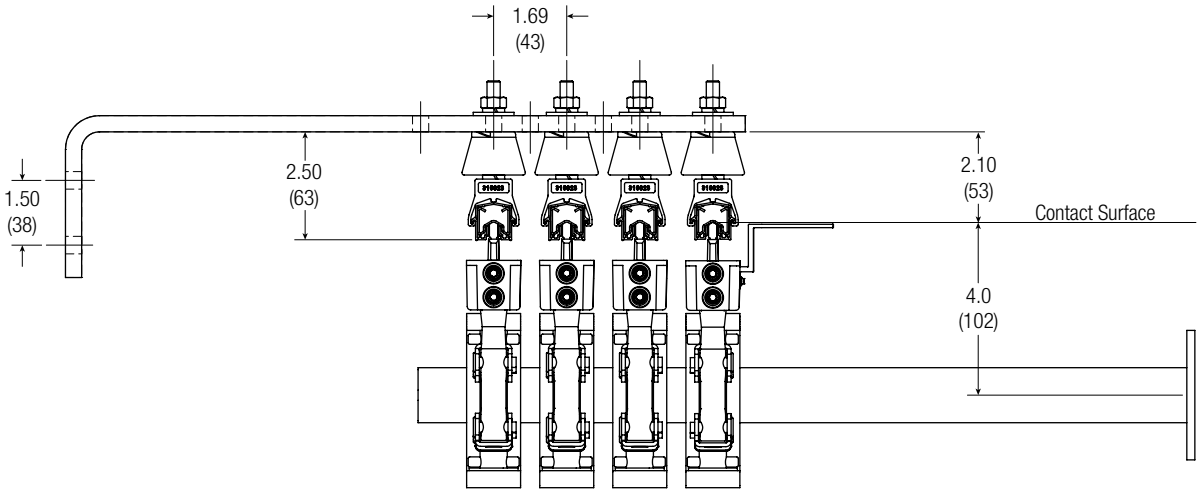

Side View

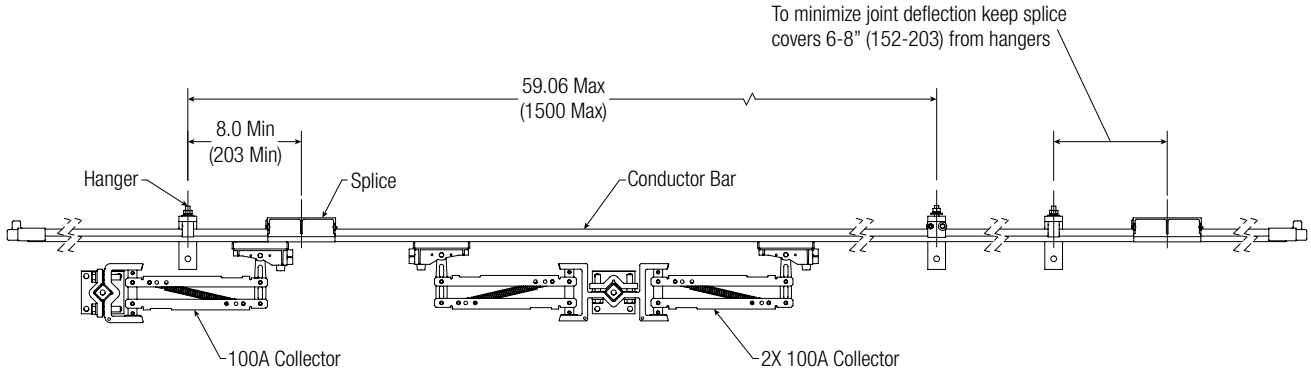

Heat Wire

Heater Wire System

A heater wire system is recommended for outdoor applications where frost and ice buildup may occur. The thermostatic control box will automatically energize the heater wire system at temperatures of 35ºF (1.66ºC) and below. Heater wires are pre-installed in each section of bar. Please consult Conductix-Wampfler for assistance in selecting the correct heater wire system.

Heater Wire (Male/Female)

Heater Wire Connection

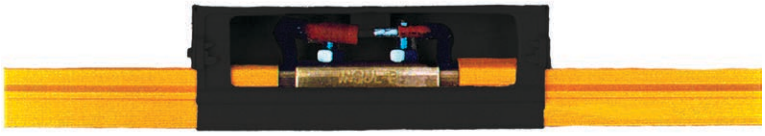

Notes

Other Products from Conductix-Wampfler

The products described in the this catalog represent a few of the products from the broad spectrum of Conductix-Wampfler components and systems for the transfer of energy, data, gases, and fluids. The solutions we deliver for your applications are based on your specific requirements. In many cases, a combination of several different Conductix-Wampfler products are needed to fill the application. You can count on all of Conductix-Wampfler's business units for hands-on engineering support - coupled with the perfect solution to meet your energy management and control needs.

Motor driven cable reels

Motor driven reels by Conductix-Wampfler are the perfect solution for managing long lengths of heavy cable and hoses in very demanding industrial applications. Monospiral, level wind, and random wind spools.

Slip ring assemblies

Whenever powered machinery needs to rotate 360⁰, field proven slip ring assemblies by Conductix-Wampfler can flawlessly transfer energy and data. Here, everything revolves around flexibility and reliability.

Conductor bar

Whether they are enclosed conductor rails, expandable single-pole bar systems, or high amperage bar for demanding steel mill use up to 6000 amps. Conductix-Wampfler's conductor bar is the proven solution to reliably move people and material.

Spring driven cable reels

We have 60 years experience and trusted brands such as Insul-8, Wampfler, and IER. We offer small cord reels all the way to large multi-motor units, a wide range of accessories, and hazardous location reels.

Cable Festoon systems

It's hard to imagine Conductix-Wampfler cable trolleys not being used in virtually every industrial application. They are reliable and robust and available in an enormous variety of sizes and models.

Push Button Pendants

Our ergonomic pendants are ideally suited for industrial control applications. They are available in a wide range of configurations for overhead cranes and other machinery.

Radio remote controls

Safe, secure, and reliable radios use the latest in microprocessor technology. Available in several models for overhead crane control and other types of machinery.

Inductive Power Transfer IPT®

The contact-less system for transferring energy and data. For all tasks that depend on high speeds and absolute resistance to wear.

Data Transfer: ProfiDAT® | Nexus

Safe & reliable wireless communication using slotted waveguide technology that's PROFIsafe compatible.

Nexus NB for narrow band signal transfer over power conductors

LJU Automation EMS Controller

Specialized controllers Programmable by parameters, Ideal for Electrified Monorails at automotive plants, with over 1500 in service worldwide. Adaptable for other applications

BridgeGuard™

Prevents crane to crane and crane to end collisions. IP69K rated for indoor and outdoor use, with a 3 ft to 150 ft range. Compliant with IEC 60068-2-6:2007

Air & Spring balancers | Air hoists

Conductix-Wampfler offers the full line of ENDO positioning devices. Rugged, reliable steel construction increasing safety and decreasing fatigue and body stress.

www.conductix.us

Conductix-Wampfler
has just one critical mission:
To provide you with energy and data transmission systems that will keep your operations up and running 24/7/365.

To contact your nearest sales office, please refer to:
www.conductix.contact

© Conductix-Wampfler | 2026 | Subject to Technical Modifications Without Prior Notice

CAT1003.2.5-US